AMS
High Power Magnetic Mixer



Designed complying with the rules for pharmaceutical and biotechnology industries, our AMS high power magnetic mixer contributes to maximize product yield in a wide volume ranges of the tanks. Thanks to its technology, it enables to the total integrity of the tank.
The bottom mounting allows to keep clear the tank from any other body, such as shafts from the top and baffles, thus easening vessel access, cleaning and maintenance.

WORKING PRINCIPLE

The impeller installed inside the tank rotates due to the torque from the magnetic coupling given by the external drive unit.
This magnetic transmission avoids the occurrence of cross contamination between product and external environment, a typical problem of the use of devices with mechanical seals (shafts, seals and other equipment).

PERFORMANCE

The geometry of the impeller enables excellent axial pumping flow and a medium shear rate, making it suitable for various applications. It is particularly effective for mixing difficult powders into a liquid, and it can transfer more energy than a standard magnetic mixer into the tank.

APPLICATION:

Designed for meeting the requirements of the plants in the Pharmaceutical, Food & Beverage, Cosmetics, Dairy, Fine Chemicals industries.

STANDARD CODE	Volume range Vigorous/Gentle	Motor Power rating	Weight	Impeller Diameter	Weld plate Diameter/Thickness
AMS-02P1BS-AF-1B	5 – 10 L	0.18Kw-0,24 hp	7 Kg	Ø 63 mm	Ø 60 x 10 mm
AMS-04P1BS-AF-1B	10 – 50 L	0.37 Kw-0.50 hp	10 Kg	Ø 74 mm	Ø 70 x 10 mm
AMS-06P1BS-AF-1B	50 – 150 L	0.75 Kw-1.02 hp	17 Kg	Ø 88 mm	Ø 85 x 15 mm
AMS-08P1BS-AF-1B	150 – 500 L	1.5 Kw-2.04 hp	24 Kg	Ø 109 mm	Ø 125 x 23 mm
AMS-12P1BS-AF-1B	300 – 2.000 L	2.2 Kw-2.99 hp	31 Kg	Ø 126 mm	Ø 150 x 23 mm
AMS-20P1BS-AF-1B	1.000 – 3.000 L	4.0 Kw-5.44 hp	45 Kg	Ø 164 mm	Ø 185 x 23 mm
AMS-32P1BS-AF-1B	2.000 – 6.000 L	7.5 kw-10.20 hp	77 Kg	Ø 209 mm	Ø 250 x 30 mm
AMS-64P1BS-AF-1B	3.000 – 20.000 L	18.5 Kw-25.15 hp	195 Kg	Ø 209 mm	Ø 350 x 50 mm

- The mixing capacities above are based on aqueous like products with a density of 1.000 Kg/m3 and a viscosity of 1 cp.
- AMS High power magnetic mixer can also be combined with a standard AMT mixer to achieve a variety of powerful results, such as collapsing vortex to prevent foaming, increased agitation, maintained suspensions at low levels etc...

Advantages :

- Maximum process efficiency, minimal prduct loss
- Optimal flow with higher efficiency and less energy consumption
- Great flexibility in volume, viscosity, speed
- Optimized sanification due to fully drainability and design of the impeller
- Minimized downtime due to ease of maintenance

DATASHEETS

Last updates can be found on our website - www.aerreinox.it
In the interests of development of the product, we reserve the right to change the specifications without prior notice

Aerre Inox S.r.l.
Via Gerola n.4 – 26010 FIESCO (CR) Italy
Tel. +39. 0374.370828 info@aerreinox.it
www.aerreinox.it VAT IT 00962930194

Technical Information:

Material wetted parts:

Welding plate	stainless steel AISI 316L 1.4435 (04 - 08) - 1.4404 (20 - 64)
Impeller	stainless steel AISI 316L 1.4435 (04 - 08) - 1.4404 (20 - 64)
Static bearing	tungsten Carbide (standard), Silicon Carbide, Zirconium Oxide
Dinamic bearing	tungsten Carbide (standard), Silicon Carbide, Zirconium Oxide
Seals for static bearing	FEP (silicone core, PTFE coated)
Fixing screw	stainless steel AISI 316L 1.4435 (04 - 08) - 1.4404 (20 - 64)

Surface Finish Ra ≤ 0,5µm (OPTIONAL: electropolishing, other on request)

Welding plate:

Design pressure	+10 bar(g)
Design temperature	-80 to +200°C

In compliance with PED Directive 2014/68/EU

Mixer working temperature 0°C ÷ 150°C (Only for sterilization or short time)

Motor data:

Motor type	Three-phase asynchronous motor
Voltage	230/400 V AC
Frequency	10-50Hz (operated with VFD, not supplied)
Number of poles	4
Protection type	IP 55

PTC temperature probe included

Painting RAL 9010 (not available for ATEX)

Speed range 400÷1450rpm ***other on request***

Certification

3.1 material certificates (in contact) according to UNI EN 10204
FDA
USP Class VI
Optional ATEX version
other certificates on request

Labelling for full traceability purposes each welding plate and complete mixer are individually marked with part number and batch

Warning: the assembled Mixer may have different design temperature and / or pressure limits.
The weakest component in the assembled product determines the maximum design temperature and pressure limits.

STANDARD

Mixer size	Motor power rating	Poles	Min/max rpm for mixer
AMS-02	0.18 Kw / 0.24 hp	4	400÷1450rpm
AMS-04	0.37 Kw/0.50 hp	4	400÷1450rpm
AMS-06	0.75 Kw / 1.02 hp	4	400÷1450rpm
AMS-08	1.50 Kw / 2.04 hp	4	400÷1450rpm
AMS-12	2.20 Kw / 2.99 hp	4	400÷1450rpm
AMS-20	4.00 Kw / 5.44 hp	4	400÷1450rpm
AMS-32	7.50 Kw / 10.20 hp	4	400÷1450rpm
AMS-64	18.5 Kw / 25.15 hp	4	400÷1450rpm

ATEX

Mixer size	Motor power rating	Poles	Min/max rpm for mixer
AMSA02	0.18 Kw / 0.24 hp	4	400÷1450rpm
AMSA04	0.37 Kw/0.50 hp	4	400÷1450rpm
AMSA06	0.75 Kw / 1.02 hp	4	400÷1450rpm
AMSA08	1.50 Kw / 2.04 hp	4	400÷1450rpm
AMSA12	2.20 Kw / 2.99 hp	4	400÷1450rpm
AMSA20	4.00 Kw / 5.44 hp	4	400÷1450rpm
AMSA32	7.50 Kw / 10.20 hp	4	400÷1450rpm
AMSA64	18.5 Kw / 25.15 hp	4	400÷1450rpm

DATASHEETS

Last updates can be found on our website - www.aerreinox.it
In the interests of development of the product, we reserve the right to change the specifications without prior notice

Aerre Inox S.r.l.
Via Gerola n.4 – 26010 FIESCO (CR) Italy
Tel. +39. 0374.370828 info@aerreinox.it
www.aerreinox.it VAT IT 00962930194

Nominal dimensions

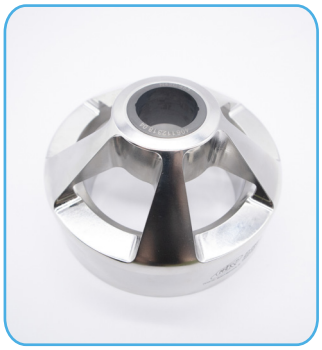



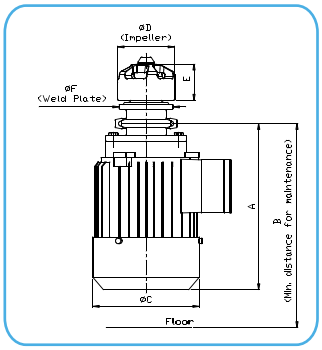

CODE	A mm	B mm	ØC motor	ØD impeller	E mm	ØF weld plate
AMS-02P1BS-AF-1B	230.5	315	124	63	48.5	Ø60 mm
AMS-04P1BS-AF-1B	235	325	145	74	51	Ø70 mm
AMS-06P1BS-AF-1B	322	415	159	88	51.5	Ø85 mm
AMS-08P1BS-AF-1B	396	490	178	109	71	Ø125 mm
AMS-12P1BS-AF-1B	432.5	530	198	126	71	Ø150 mm
AMS-20P1BS-AF-1B	439	545	222	164	86.5	Ø185 mm
AMS-32P1BS-AF-1B	536	655	262	209	91	Ø250 mm
AMS-64P1BS-AF-1B	679.5	915	367.5	209	127.5	Ø350 mm



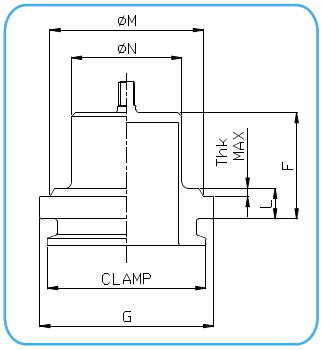

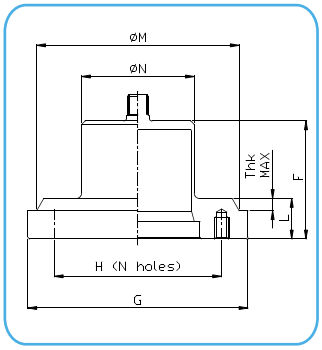

CODE	F mm	G mm	L mm	Thk max mm	Ø H mm	Holes qty x thread	Clamp	Ø M tank hole	Ø N	Weight Kg
MM2/9/1-T	45	60	10	3	-	-	1"½	55	31	0,40
MM4/9/1-T	47	70	10	4	-	-	2"	60	40	0,50
MM6/9/1-T	52	85	15	4	-	-	2" ½	75	54	0,80
MM8/9/1-T	67	125	23	7	95	8 x M8	-	115	64	1,90
MM12/9/1-T	67	150	23	7	120	8 x M8	-	140	84	2,50
MM20/9/1-T	70	185	23	7	160	9 x M8	-	175	124	3,55
MM32/9/1-T	81	250	30	9	200	8 x M12	-	240	166	8,70
MM64/9/1-T	137	350	50	15	250	8 x M12	-	340	166	32,15

Thk : to be defined on purchase order phase
higher thickness on request

DATASHEETS

Last updates can be found on our website - www.aerreinox.it
In the interests of development of the product, we reserve the right to change the specifications without prior notice

Aerre Inox S.r.l.
Via Gerola n.4 – 26010 FIESCO (CR) Italy
Tel. +39. 0374.370828 info@aerreinox.it
www.aerreinox.it VAT IT 00962930194

EXPLODED VIEW

Size	Impeller	KIT static bearing
AMS-02	SM2/4-T-AR	KMT-04-AF-AR
AMS-04	SM4/4-T-AR	KMT-04-AF-AR
AMS-06	SM6/4-T-AR	KMT-04-AF-AR
AMS-08	SM8/4-T-AR	KMT-08-AF-AR
AMS-12	SM12/4-T-AR	KMT-08-AF-AR
AMS-20	SM20/4-T-AR	KMT-20-AF-AR
AMS-32	SM32/4-T-AR	KMT-20-AF-AR
AMT-64	SM64/4-T-AR	KMT-20-AF-AR

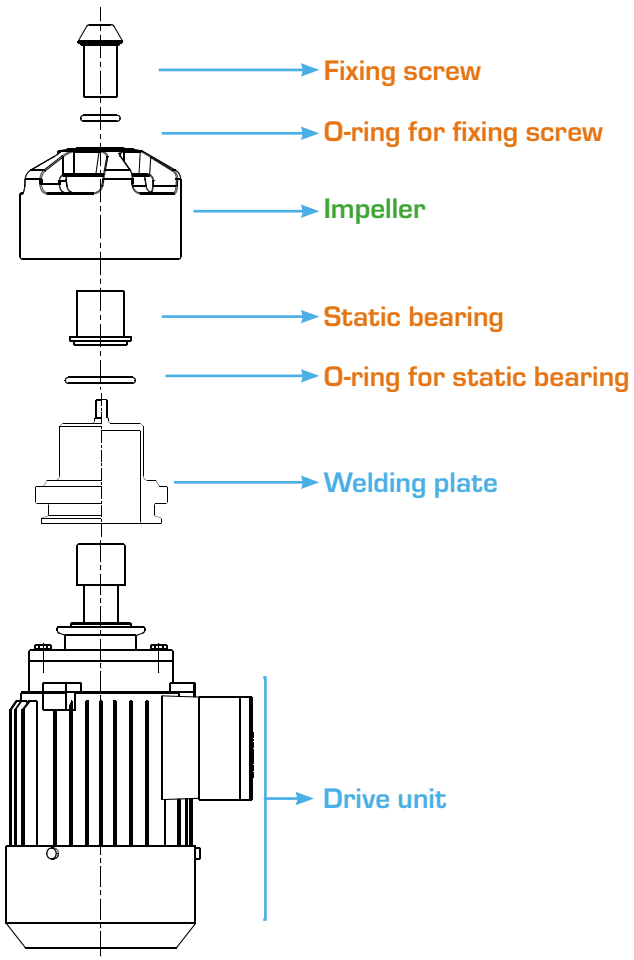

AMS — 20 P AAS — A F 050 — A — 1 A

- [—] Standard
- [**A**] ATEX

Size 02,04,06,08,12,20,32,64

Welding Flange
- **P** standard **NOT** included
- **L** for insulation tank **NOT** included

• Drive unit

Size	Standard	ATEX
02	1 BS	1 BE
04	1 BS	1 BE
06	1 BS	1 BE
08	1 BS	1 BE
12	1 BS	1 BE
20	1 BS	1 BE
32	1 BS	1 BE
64	1 BS	1 BE

Bearings
- **A** tungsten carbide - **E** silicon carbide - **I** zirconium oxide

Seal
F FEP (silicone core, PTFE coated) - other material on request

Extension
mm of shaft lenght over than standard execution
(if the extension is not requested, remove this part)

Optional
A speed counter
C predisposition for speed counter

1 Std. surface finish
5 Electropolish

A 1.4404 (20-32-64)
B 1.4435 (from 02 to 12)
other on request

DATASHEETS

Last updates can be found on our website - www.aerreinox.it
In the interests of development of the product, we reserve the right to change the specifications without prior notice

Aerre Inox S.r.l.
Via Gerola n.4 – 26010 FIESCO (CR) Italy
Tel. +39. 0374.370828 info@aerreinox.it
www.aerreinox.it VAT IT 00962930194

OPTIONAL

- Welding plate with higher thickness (**A**)
- Asportable welding plate
- Customized welding plate
- Shaft extension (**B**)
- Speed counter
- Stainless steel motor
- Different drive unit
- Different RPM
- Electropolishing
- Other surface finishing
- Other materials
- Mounting tool (**C**)
- Welding tools (**D**)
- Customized impellers
- ATEX

  II 2G Ex h IIB T4 Gb X
  II 2D Ex h IIIC T135°C Db X

A

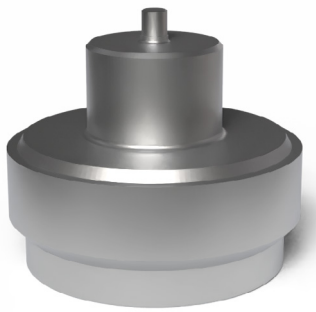

B

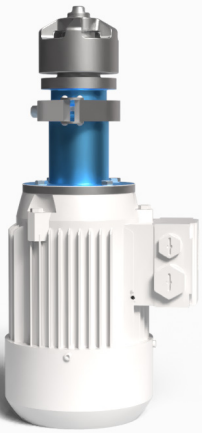

C



D

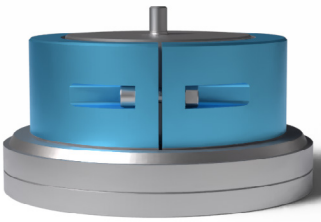

DATASHEETS

Last updates can be found on our website - www.aerreinox.it
In the interests of development of the product, we reserve the right to change the specifications without prior notice

Aerre Inox S.r.l.
Via Gerola n.4 – 26010 FIESCO (CR) Italy
Tel. +39. 0374.370828 info@aerreinox.it
www.aerreinox.it VAT IT 00962930194